PART No: T12_21[ ][ ] [ ][ ][ ][ ] [ ][ ][ ]	FILE: specT12-21xx-xxxx-xxx.t4g	APP. SUPPLIER:

MATERIAL:

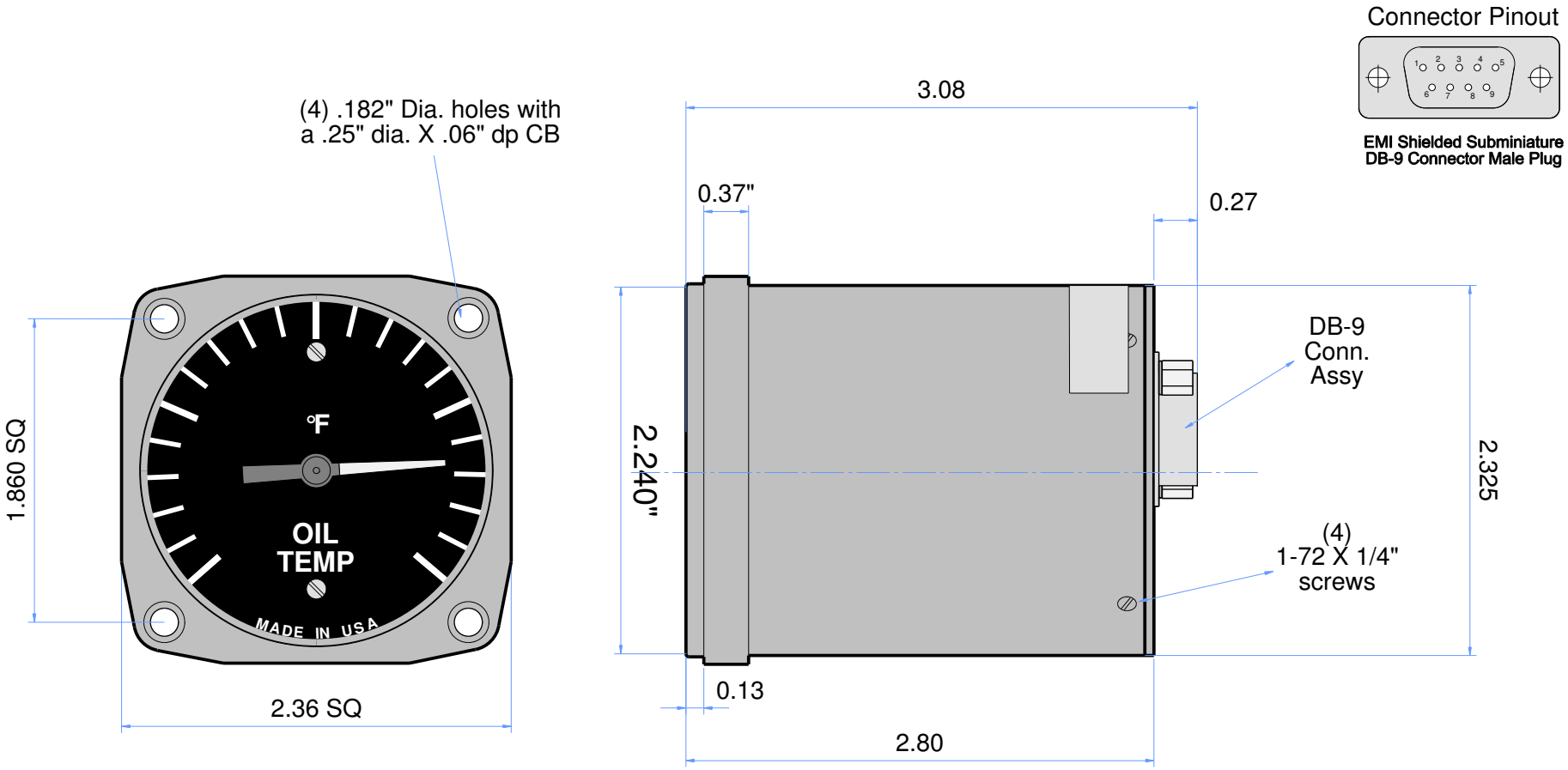

SPECIFICATION DWG

ECO	REV	DESCRIPTION	DR	DATE	APP

TOLERANCES EXCEPT AS NOTED

.XX ± 0.01
.XXX ± 0.005

ANGULAR

UMA Inc, 260 Main St. Dayton, VA 22821

SCALE NTS	DATE: 5/17/05	SHEET 1 of 1	
SUPPLIER COMPLETE ☐	DRAW BY RCB		
DESCRIPTION 2 1/4" Temperature Gauges			
APP	PART# T12-21[ ][ ]-[ ][ ][ ]-[ ][ ][ ]		REV IR