Panel Cut-out for typical
3 1/8" Instrument

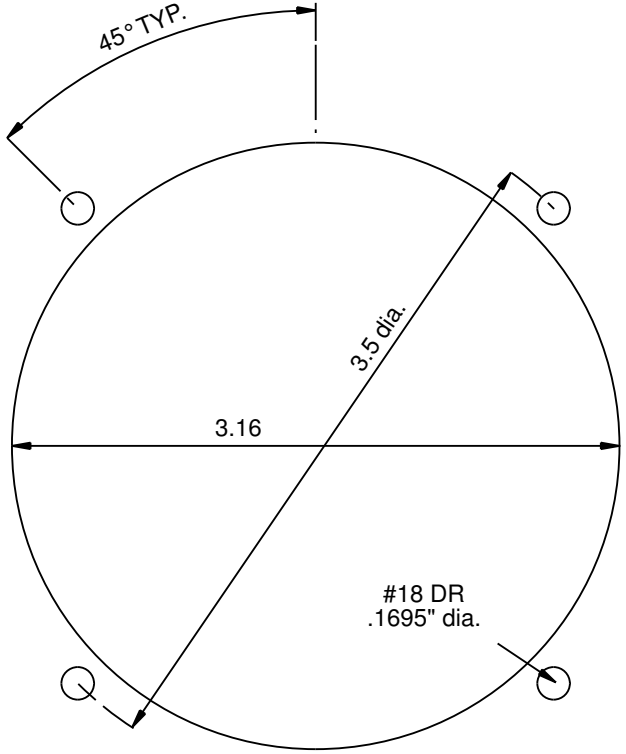


Panel Cut-out for typical
2 1/4" Instrument

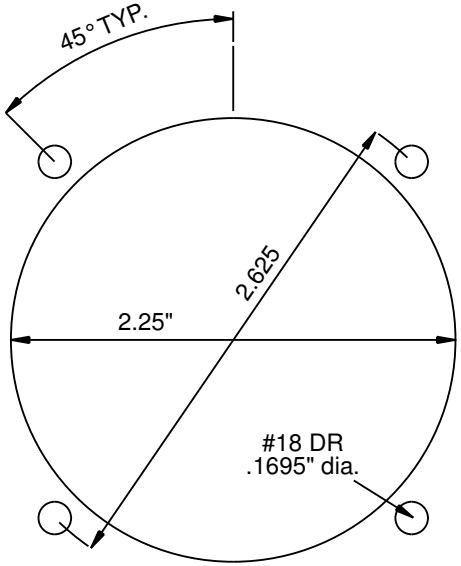


15-200-060

Panel Cut-out for
1 1/4" Electronic Instrument

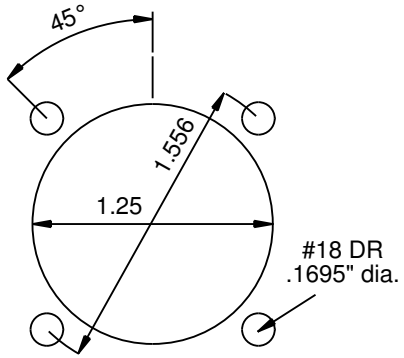


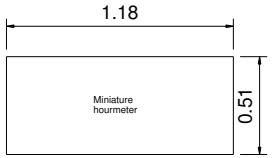


Panel Cut-out for
1 1/4" Mechanical Instrument
Type A

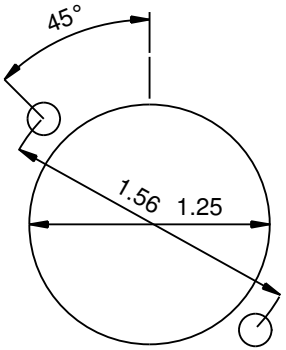


Panel Cut-out for
1 1/4" Mechanical Instrument
Type B

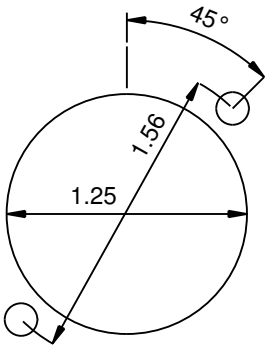


Panel Cut-out for
1 1/4" Mechanical Instrument
Type C

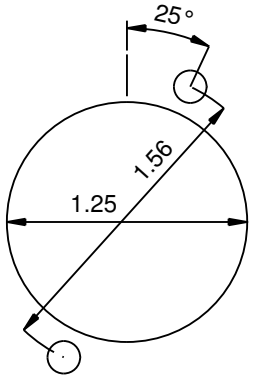

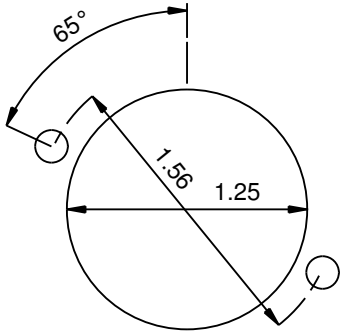
Panel Cut-out for
1 1/4" Mechanical Instrument
Type D