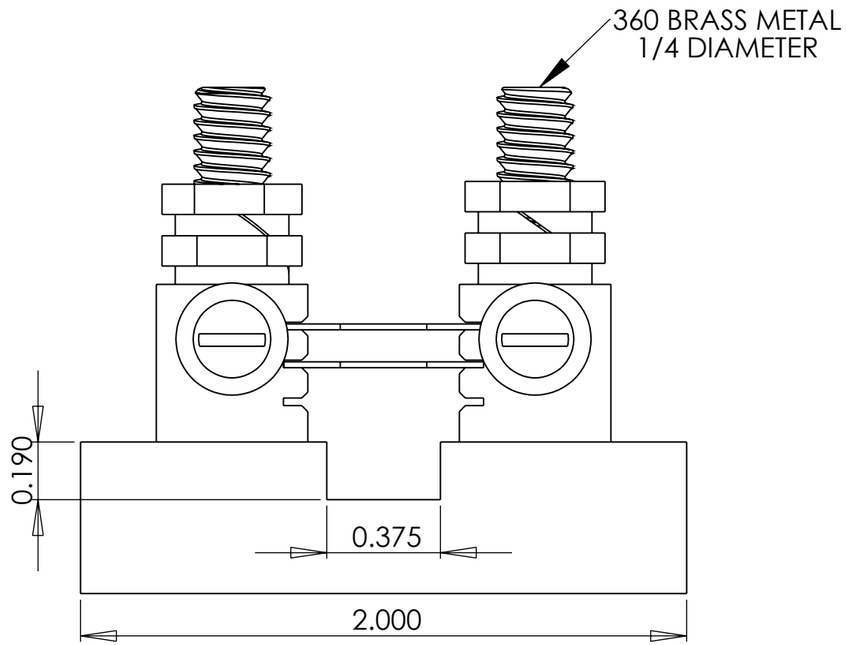

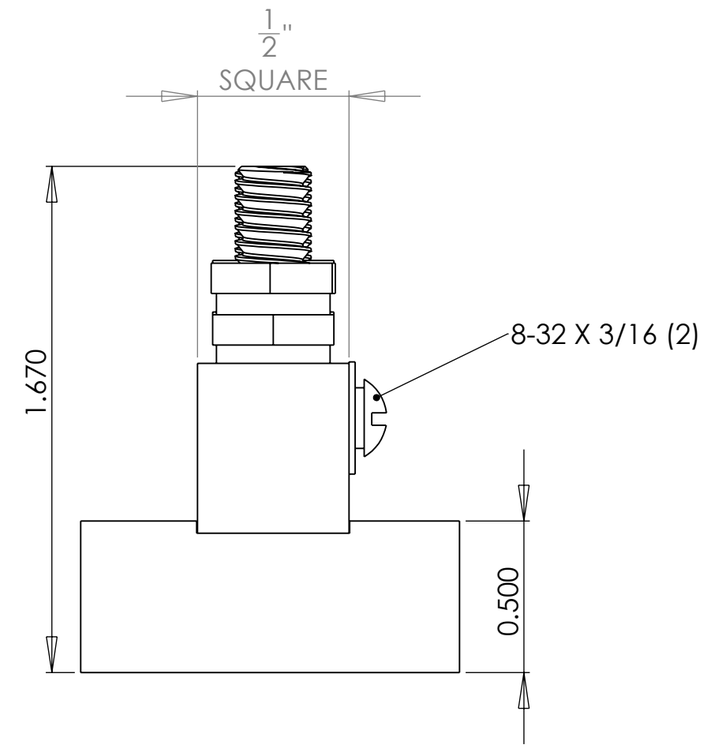

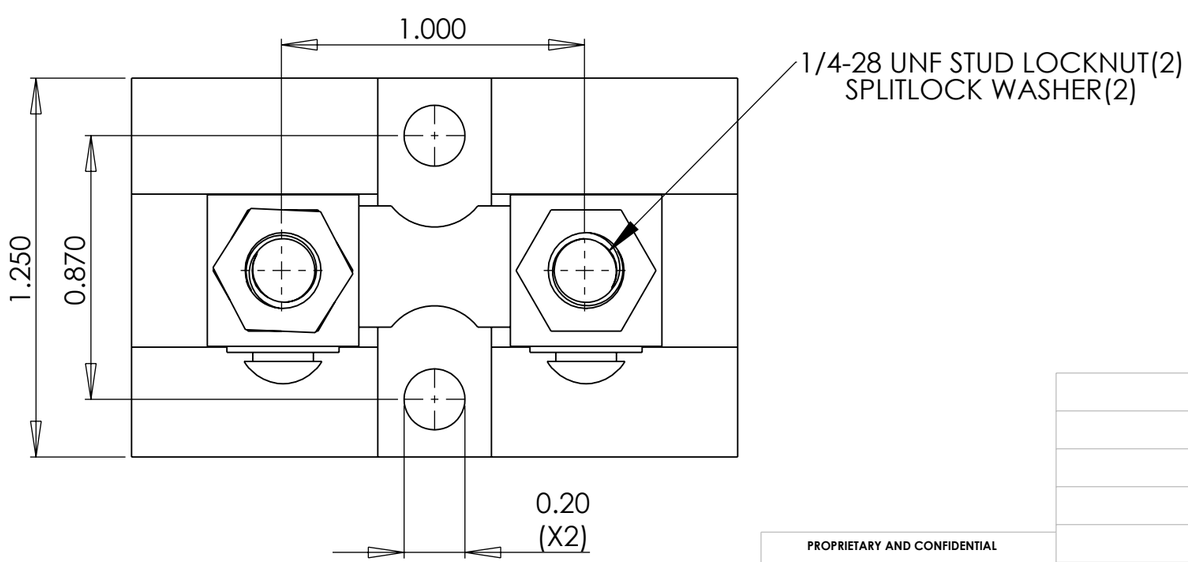

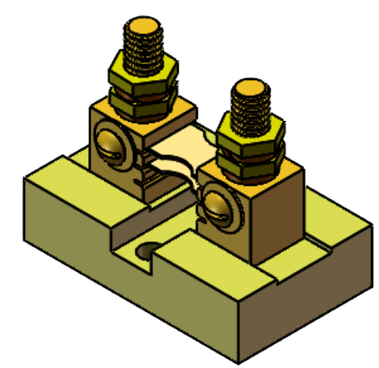

PROPRIETARY AND CONFIDENTIAL

THE INFORMATION CONTAINED IN THIS DRAWING IS THE SOLE PROPERTY OF UMA. ANY REPRODUCTION IN PART OR AS A WHOLE WITHOUT THE WRITTEN PERMISSION OF UMA IS PROHIBITED.

NEXT ASSY	USED ON
APPLICATION	

UNLESS OTHERWISE SPECIFIED:

DIMENSIONS ARE IN INCHES
TOLERANCES: .001
FRACTIONAL ±
ANGULAR: MACH ± BEND ±
TWO PLACE DECIMAL ±
THREE PLACE DECIMAL ±

INTERPRET GEOMETRIC TOLERANCING PER:

MATERIAL : Brass & POLYCARBONATE

FINISH

DO NOT SCALE DRAWING

	NAME	DATE
DRAWN	RMT	9-12-11
CHECKED		
ENG APPR.		
MFG APPR.		
Q.A.		

COMMENTS:

uma

TITLE:

SHUNT

SIZE	DWG. NO.	REV
B	ICUX	B

SCALE: 1:1 | WEIGHT: | SHEET 1 OF 1